Autodesk

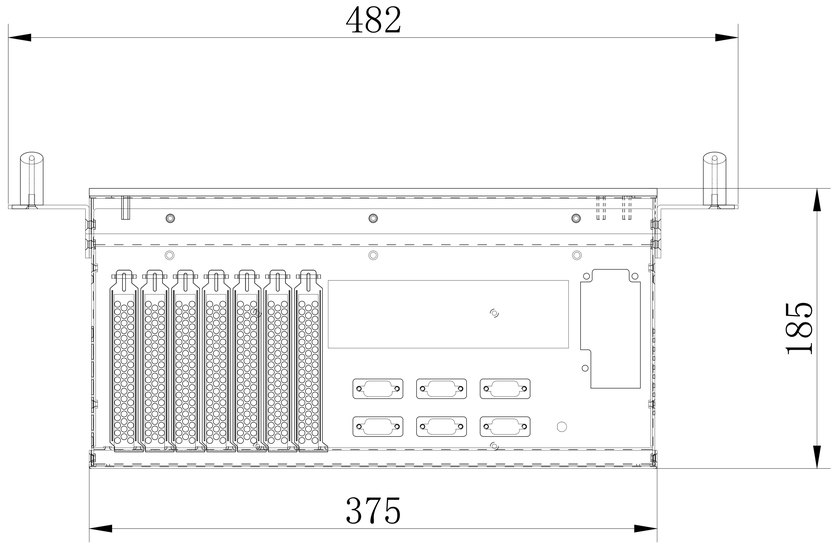


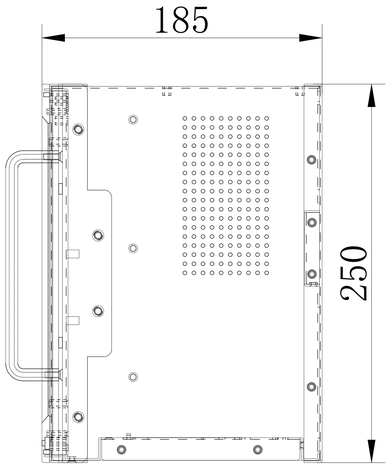


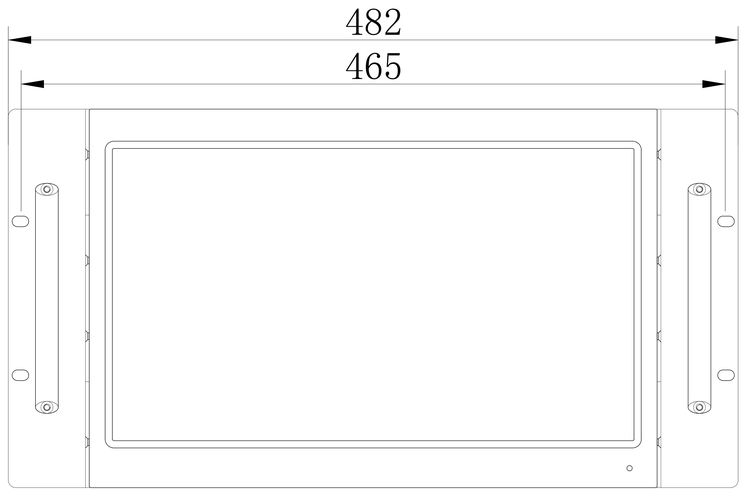


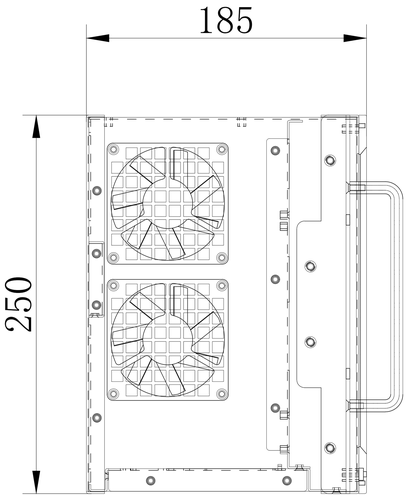


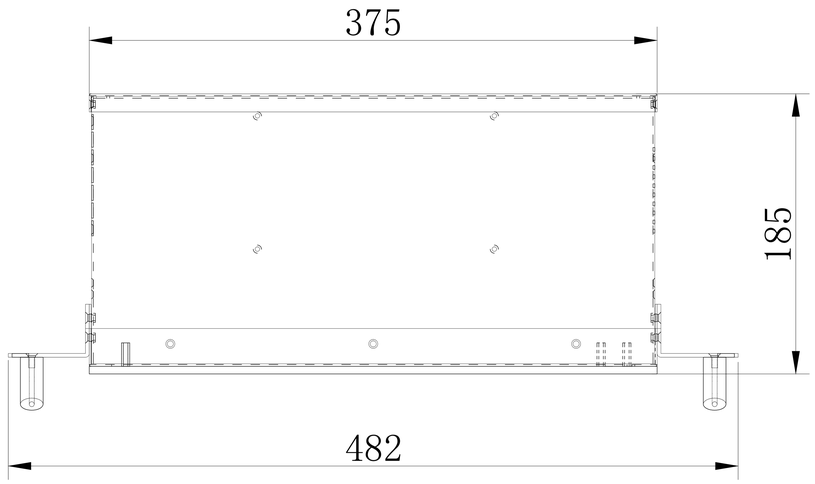


Autodesk
Autodesk
Autodesk